كلية الهندسة بشبرا

FACULTY OF ENGINEERING AT SHOUBRA

STEREO AUDIO AMPLIFIER

Group :

Mohamed Mostafa Abd El-Kareem

Nancy Ashraf Dawood

Nada Ashraf Abd El-Mohsen

Nesreen Ahmed Abduallah

Nour Abd El-Sater Soliman

Supervised by :

Dr. : Said Emam

Content

- Introduction of the project.
- Circuit description.
- Simulation: circuit diagram – simulation results. (using Portus – Multisim – or any simulator).
- Experiments on test board - experimental results.
- Printed circuit board (PCB) layout.
- Hardware implementation and results.
- Conclusion.
- Attachments: data sheets.

Introduction of the project

This report covers the design and implementation of a multi-stage stereo audio amplifier.

A stereo amp is an electronic component that will boost an audio signal to create a loud and clear sound that you can hear through your speakers using external energy source.

You'll need a greater power source that will generate that sound through your speakers and this will increase the power to the output and the quality of sound so you can comfortably hear the music through your speakers.

The stereo amplifier plays a critical role in any high-fidelity audio system. It acts as the bridge between your audio source (e.g., turntable, CD player) and your loudspeakers. By amplifying the weak electrical signals from the source, the amplifier provides enough power to drive the speakers and produce rich, clear sound. This report will delve into the world of stereo amplifiers, exploring their function, key features, and the factors that influence their performance.

Circuit description

	Component	Specification	Symbol
1	LM386	___	U1,U2
2	Adapter	AC/DC 220V TO 12V 1A	BAT1
3	Speakers	8ohm	LS1,LS2
6	Resistors	10 ohm	R1, R2, R3
8	led	Green	D1
12	Ceramic Capacitors	0.1uf	C1,C3, C7,C9
11	Electrolytic Capacitors	1000uf	C2,C6
11	Electrolytic Capacitors	100uf	C4,C5,C8
13	Potentiometer	50k ohm	RV1 ,RV2
14	Switch	SPST on/off	SW1
15	Connector	2 Legs	J2 ,J3 ,J8
16	JST Connector	3 Legs	J1 ,J5,J6

LM386 IC is an audio power amplifier integrated circuit designed for use in low voltage consumer applications. It is suitable for battery-powered devices such as radios, doorbells, telephones, guitars amplifiers, and hobby electronic projects. It is mostly used as an amplifier in computer speakers and small portable stereos.

The major components of the audio amplifier are LM386 IC, power supply-12V, capacitors like 100 μF, 1000 μF, Potentiometer – 10 KΩ, connector, resistor-10 KΩ, speaker-8Ω. These components are connected as per the above circuit diagram.

For the design of this audio amplifier, firstly two power supply pins (pin 4 and pin 6) is connected where pin 4 is given to the ground and pin 6 is connected to a 12V supply. After the power supply, input from any kind of audio source like a mobile phone or microphone is connected through a 3.5 mm connector.

The potentiometer is connected to the input to control the input level in the circuit. Further, a capacitor can be connected to the input in series to remove the DC components.

We can make a bypass capacitor to reduce the noise by connecting a capacitor (100μF) to pin 7 of LM 386 IC.

At the connection of output, a capacitor (0.1 μF) and a resistor (10 Ω) are connected in series among the GND which is connected to pin 5 of the IC. This circuit form a Zobel network, a filter circuit having a capacitor and resistor and used for adjusting the input impedance.

With the help of impedance, the speaker can be connected in the range of 4 Ω to 32 Ω. Here, the audio amplifier circuit uses a speaker (8 Ω). This speaker can be connected to the capacitor (1000 μF) to remove the unnecessary DC components on the signal.

Simulation

❖ Schematic:

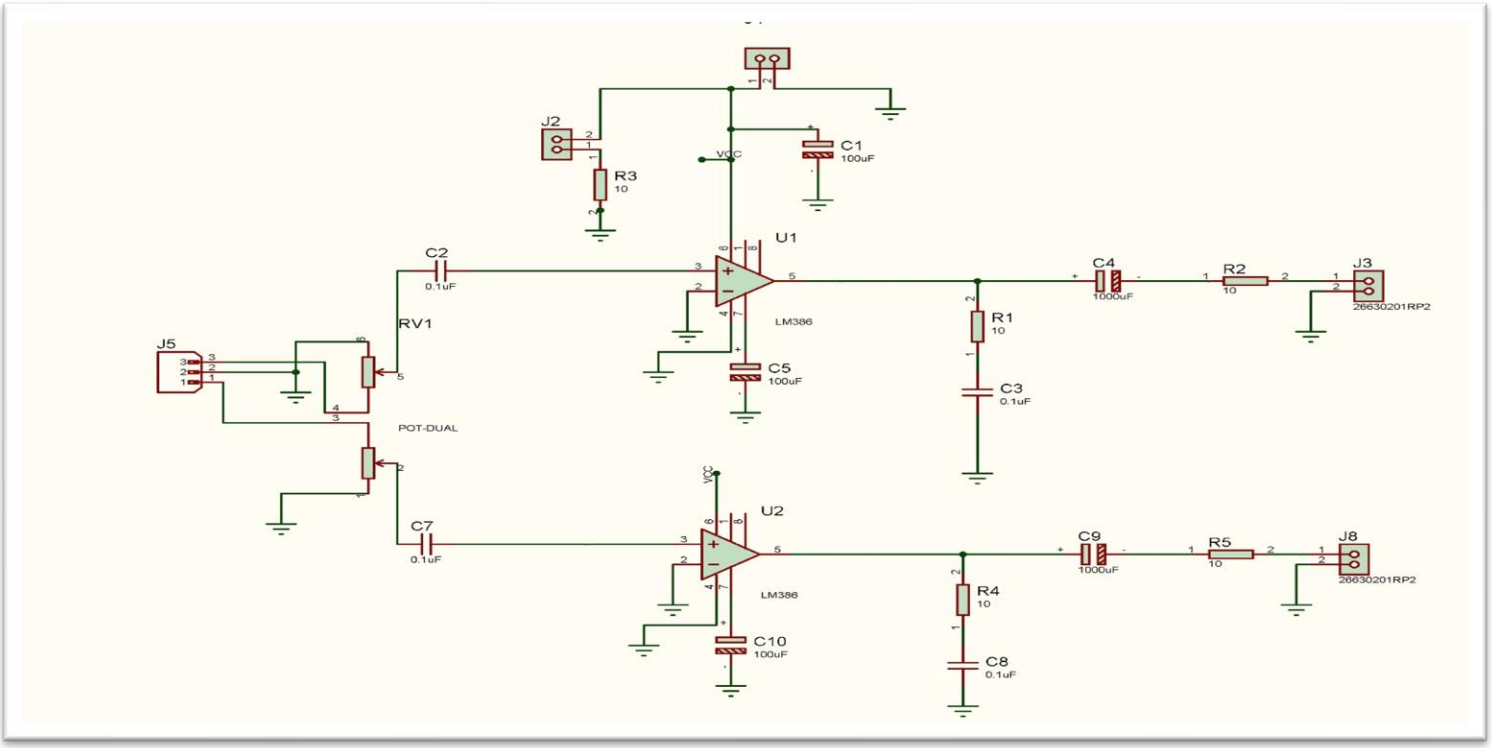

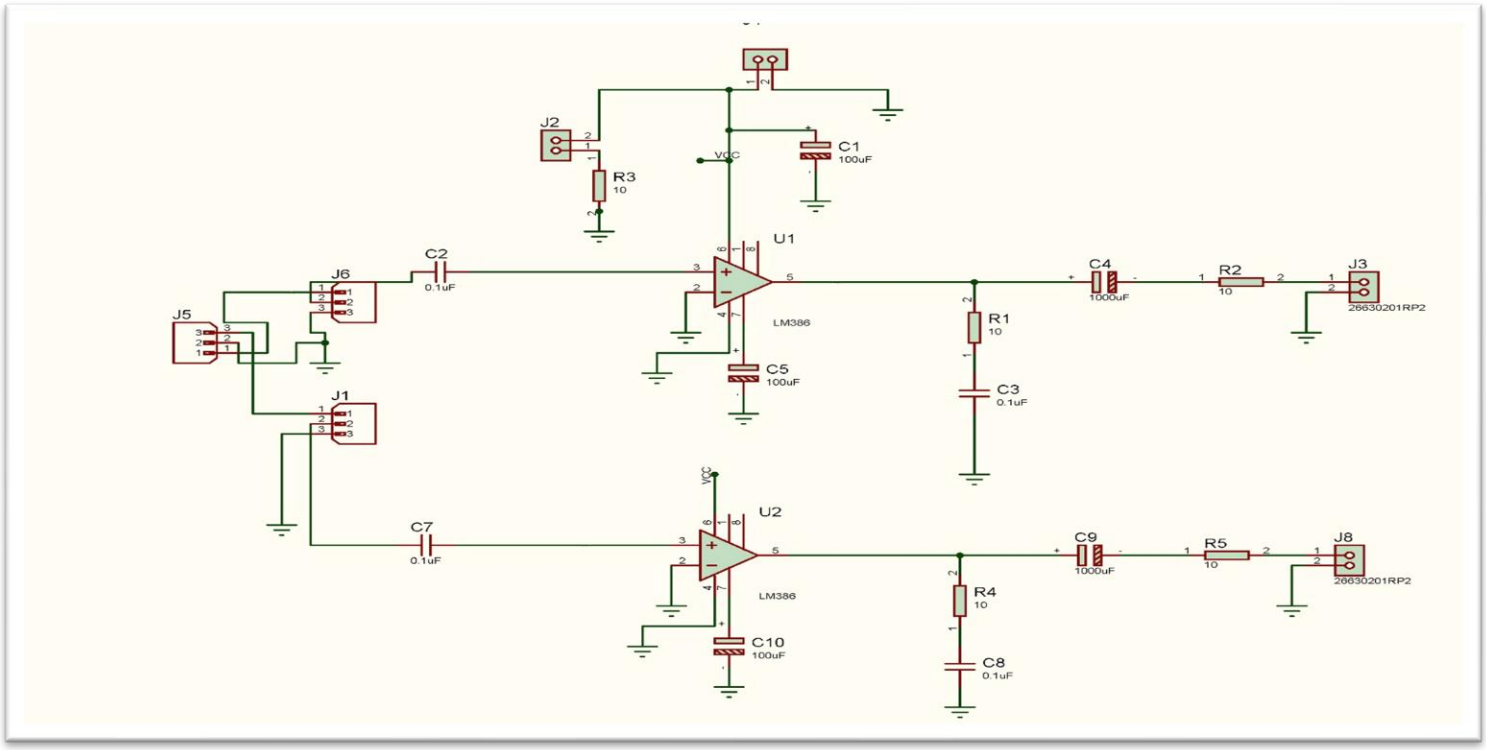

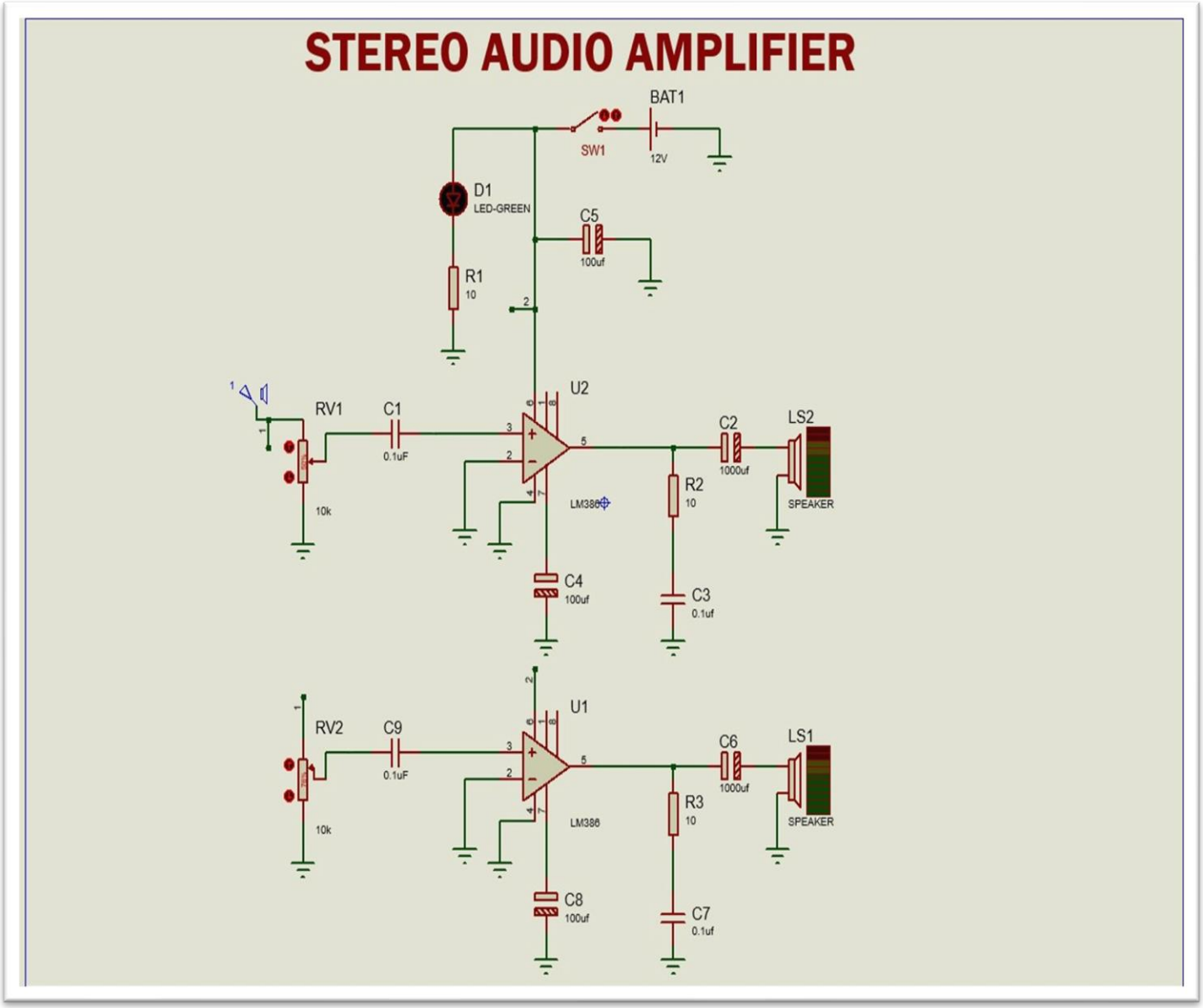
STEREO AUDIO AMPLIFIER
BAT1
SW1
12V
D1
LED-GREEN
C5
100uf
R1
10
U2
RV1
C1
0.1uF
10k
C2
1000uf
LS2
SPEAKER
R2
10
LM386
C4
100uf
C3
0.1uf
U1
RV2
C9
0.1uF
10k
C6
1000uf
LS1
SPEAKER
R3
10
LM386
C8
100uf
C7
0.1uf

❖ PCB layout :

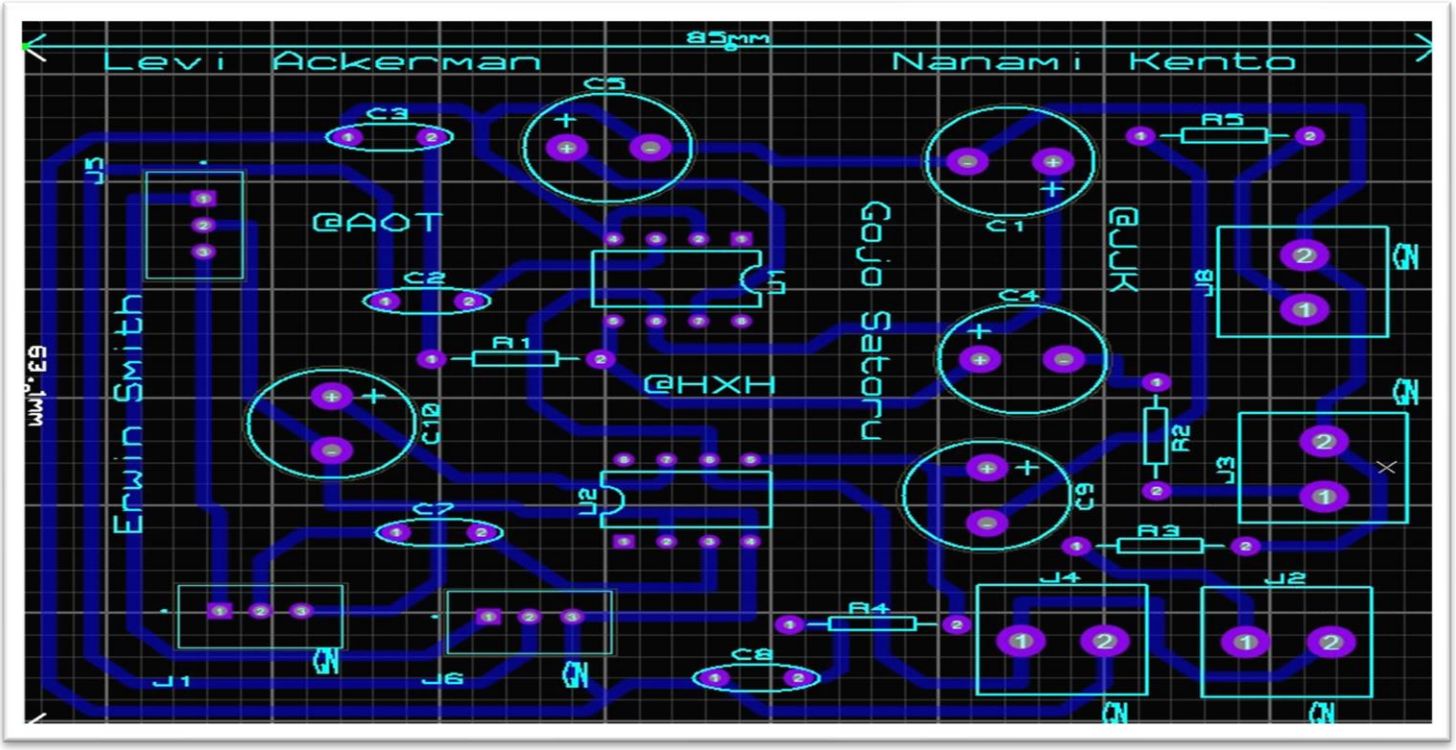

❖ 3D Visualizer :

Experiments on test board

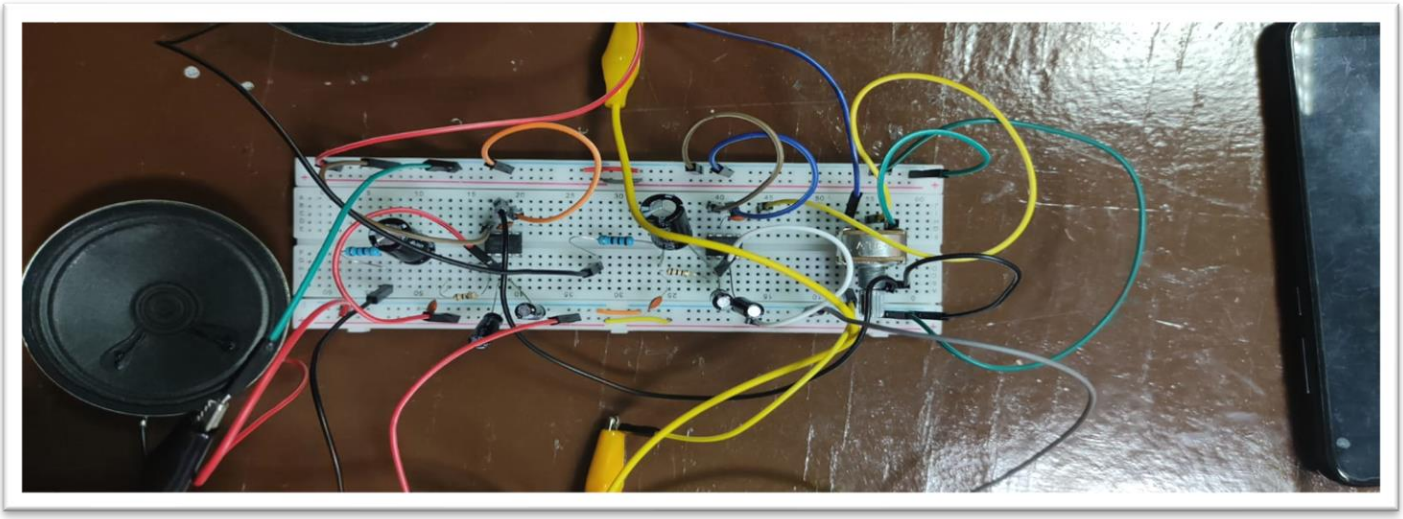

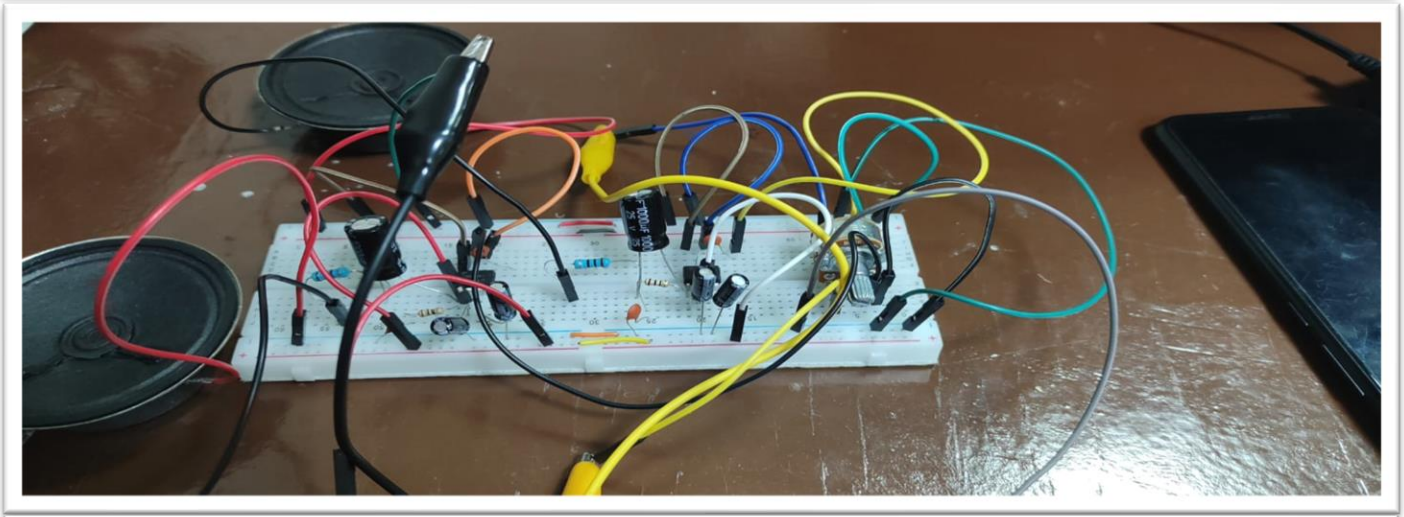

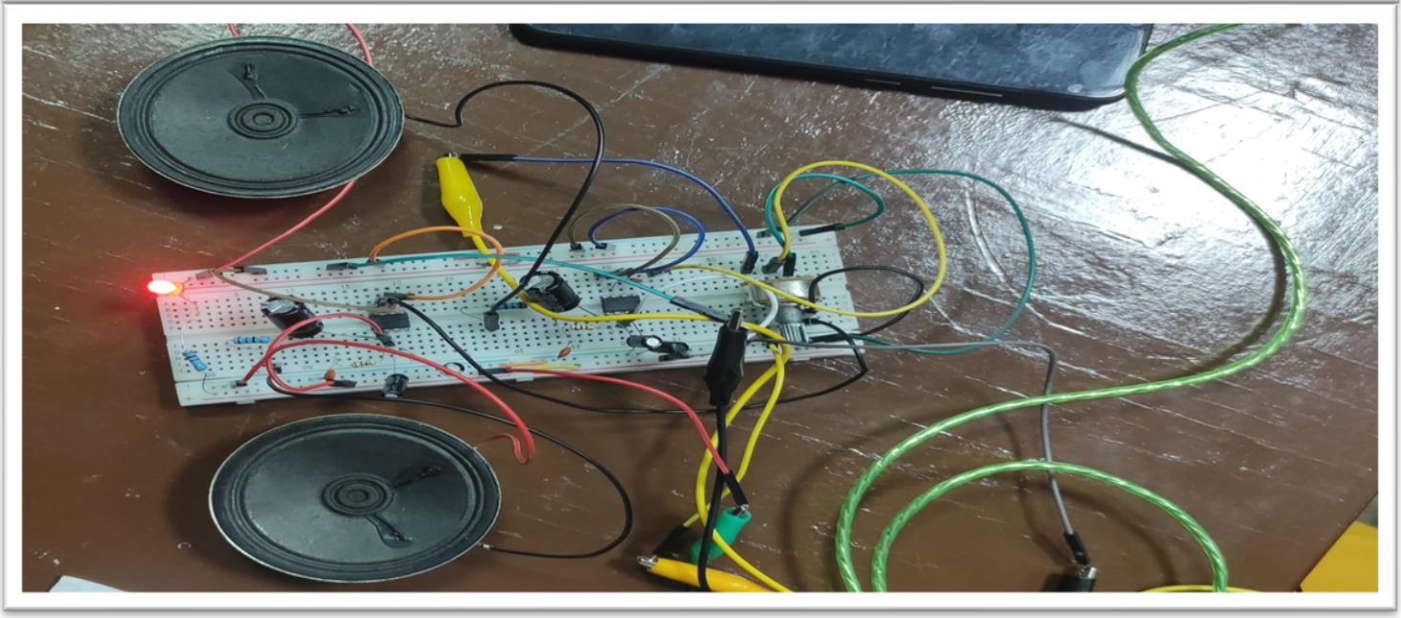

Printed circuit board (PCB) layout

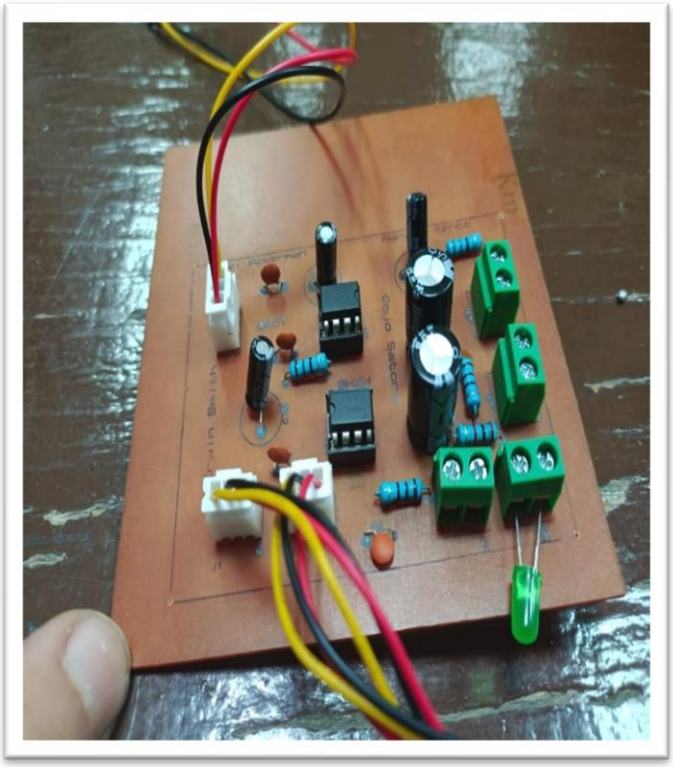

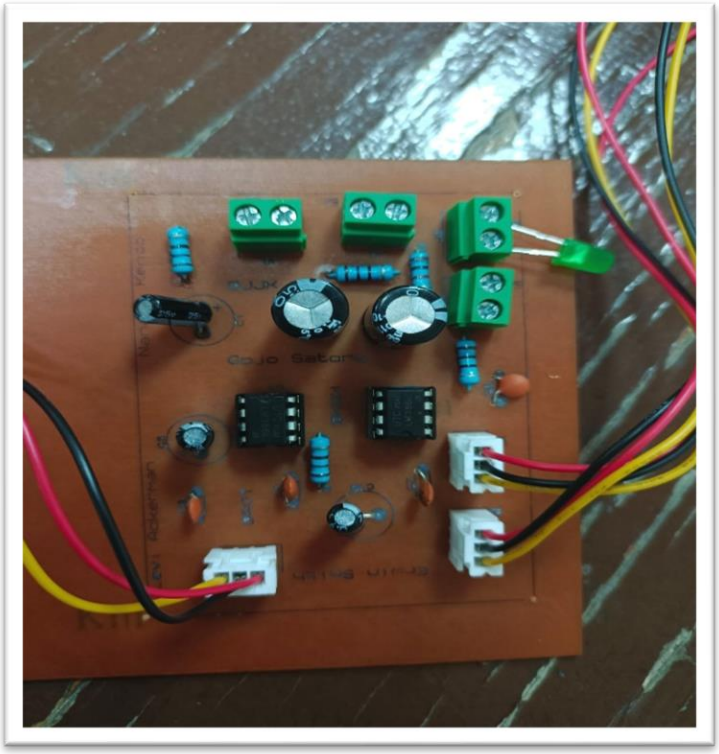

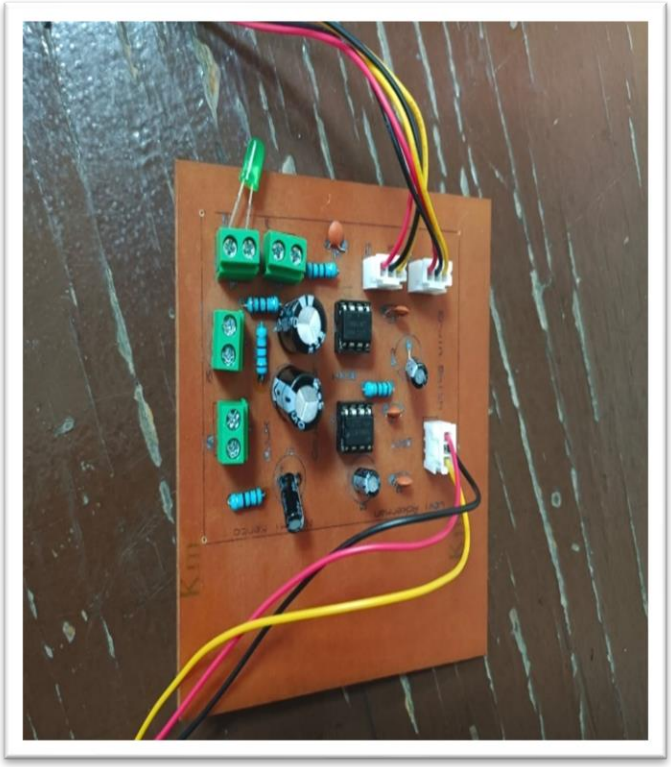

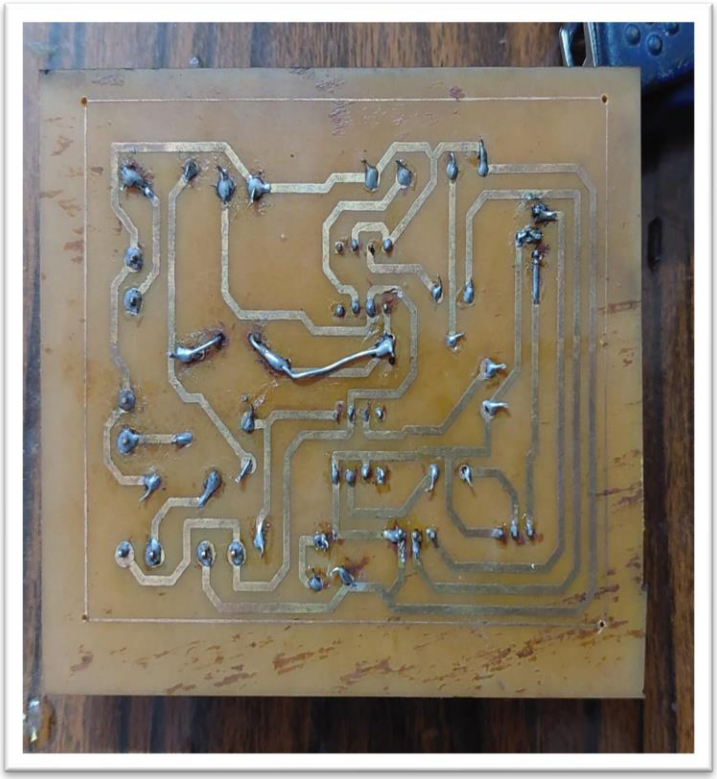

Hardware implementation and results

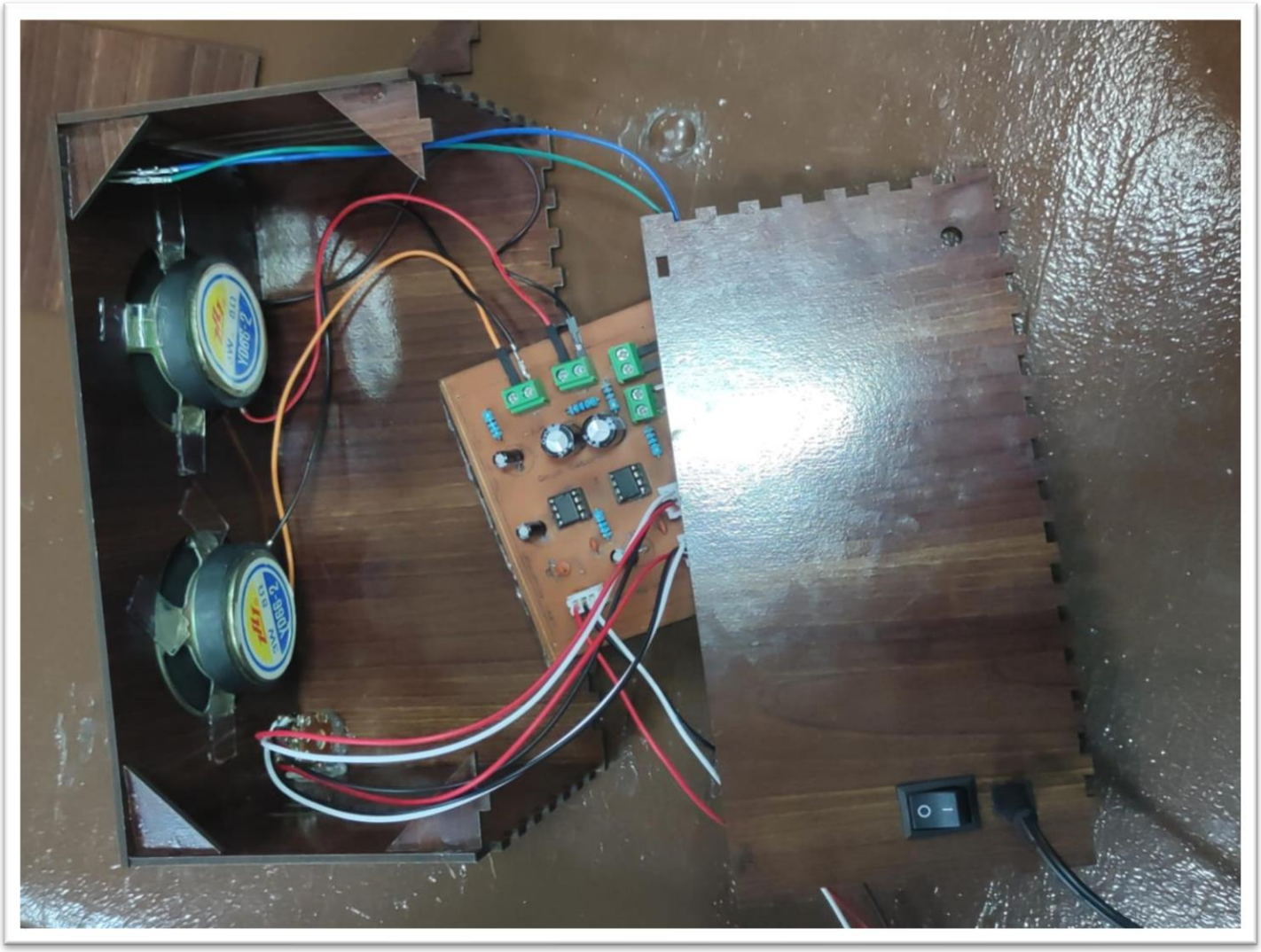

Stereo Amplifier

LEVi

Conclusion

In conclusion, the stereo amplifier effectively amplifies audio signals to drive loudspeakers. Whether for audiophile listening or general use, this amplifier provides a powerful and versatile foundation for your home audio system.

The measured performance of the stereo amplifier indicates that it meets or exceeds its specifications. These results demonstrate the amplifier's ability to reproduce audio signals with high fidelity.

Attachments: data sheets

LM386

LEDS

Capacitors